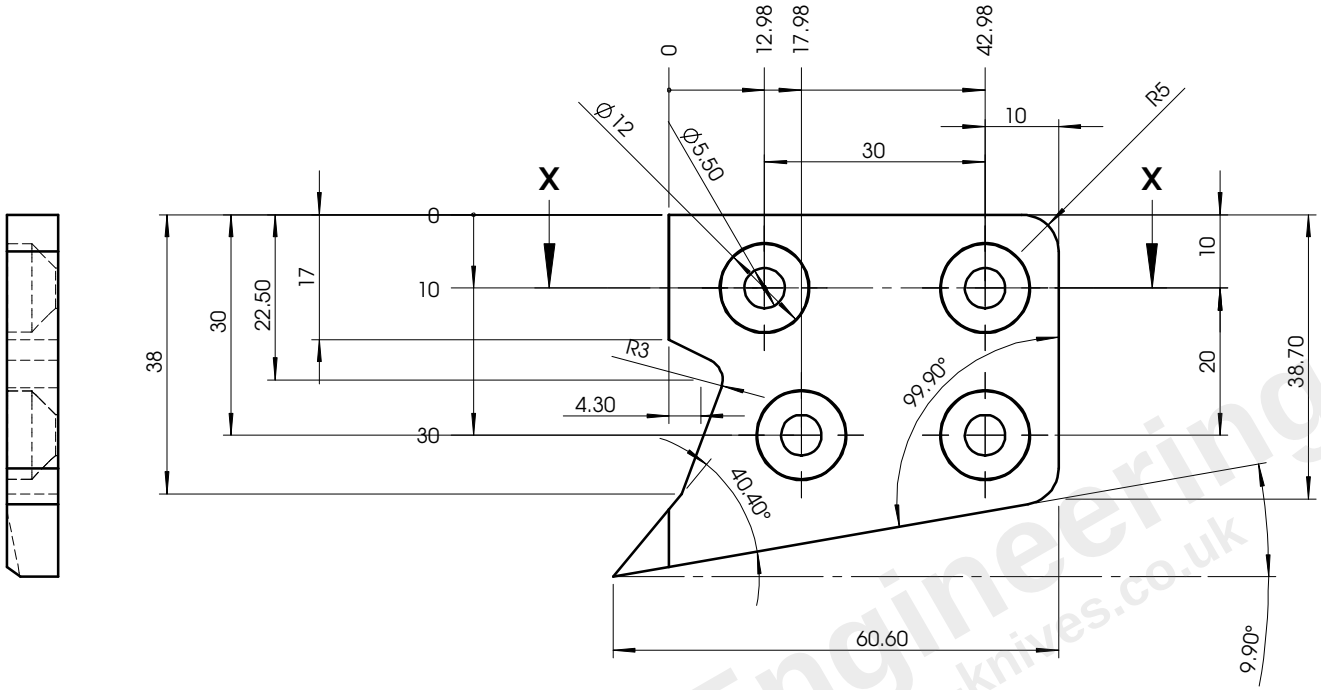

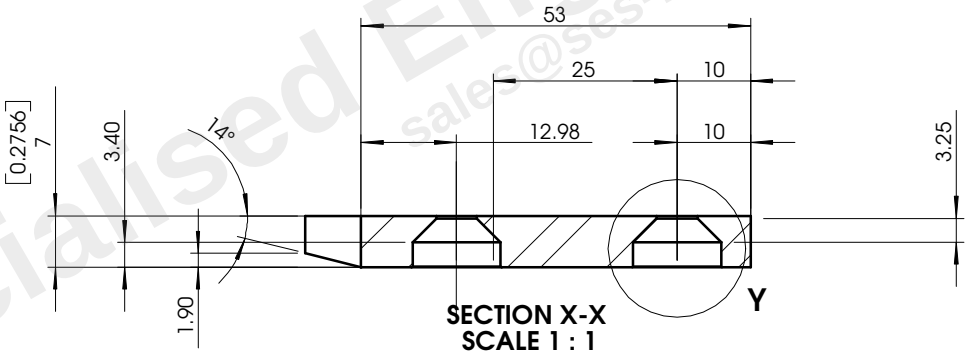

SECTION X-X
SCALE 1 : 1

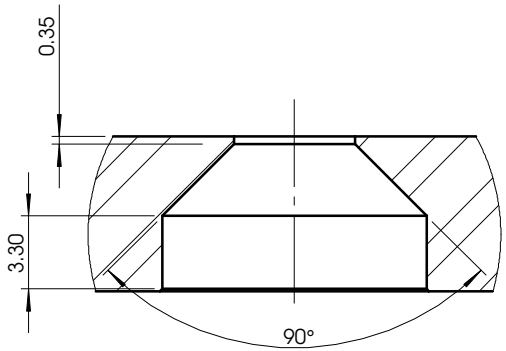

DETAIL Y
SCALE 3 : 1

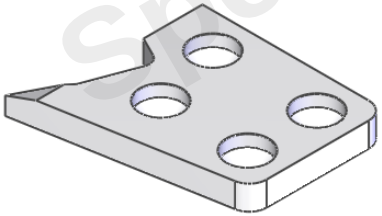

UNLESS OTHERWISE SPECIFIED:		NAME	DATE	*Specialised Engineering Services*	
DIMENSIONS ARE IN MM	DRAWN	J.R.Eades	22-08-08		
TOLERANCES AS SHOWN	CHECKED			**60 x 40 x 7 mm straight blade**	
1ST ANGLE PROJECTION	ENG APPR.				
	MFG APPR.				
	Q.A.				
MATERIAL D2	**PROPRIETARY AND CONFIDENTIAL** THE INFORMATION CONTAINED IN THIS DRAWING IS THE SOLE PROPERTY OF SPECIALISED ENGINEERING SERVICES. ANY REPRODUCTION IN PART OR AS A WHOLE WITHOUT THE WRITTEN PERMISSION OF SPECIALISED ENGINEERING SERVICES IS PROHIBITED.			SIZE **A**	DWG. NO. **SES -1000 - 304**	REV
HARDNESS 61.5 / 63 HRC					
DO NOT SCALE DRAWING				SCALE: 1 : 1	WEIGHT IN GRAMS: 95.72	SHEET 1 OF 1

REV.	DATE	DETAIL	COMMENTS

5 4 3 2 1

Specialised Engineering Services
sales@ses-knives.co.uk